The University of Manchester
Jodrell Bank
Observatory

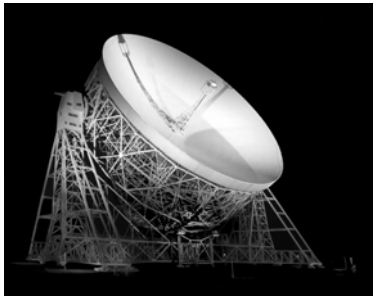

Particle Physics and Astronomy
Research Council

FABRIC at Jodrell Bank Observatory

Ralph Spencer, Bryan Anderson and
Richard Hughes-Jones
The University of Manchester

22 March 2005

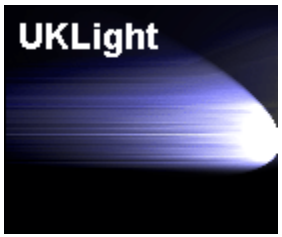

JBO projects: expertise

- ALMA, EVLA and eMERLIN optical links 30-120 Gbps per antenna
- MERLIN system and correlator
- JIVE correlator station units
- MkIV VLBI installation
- eVLBI and network development

FABRIC WP1.2. Broadband data path

- Make strategic decision on transport mechanism that is optimal for future e-VLBI application: scalable to large bandwidth, relaxed fault tolerance, multicasting, Grid enabled.

- **1.2.1. Broadband protocols**

Investigate different IP protocols vs lambda switching	1 new FTE	1 FTE contrib	JBO

- **1.2.2. Broadband data processor interface**

Develop interface to public network, e-MERLIN processor	1.0	1.0	JBO

- **1.2.3. Broadband integration and test**

Test with 10Gb/s using Onsala station	1.0	1.0	ONS

- **1.2.4. Public to private network interface**

LOFAR transport, LO & timing issues	1.0	1.0	ASTRON

Fabric Timelines: START 1st March

- **Protocol**
  - strategic document May 06
  - TCP variant, non TCP, VSI-E Aug 06
  - Multicast Jan 07
  - Test 4 Gbps capacity April 07
  - Report April 07
- **Broadband e-MERLIN**
  - Connections May 07
  - FPGA interface Nov 07
  - Interface available Sept 08
- **Broadband test**
  - start Aug 06
  - data acq device at telescope Jan 08
  - Scientific demo Oct 08

ESLEA

Exploitation of Switched Lightpaths for e-Science Applications

Project Partners

National e-Science Centre

LANCASTER UNIVERSITY

UCL

MANCHESTER 1824

UNIVERSITY OF OXFORD

Project Collaborators

CCLRC

The Council for the Central Laboratory of the Research Councils

CISCO SYSTEMS

EMPOWERING THE INTERNET GENERATION

UKERNA

Funded by

£1.1 M, 11.5 FTE

EPSRC

MRC Medical Research Council

PPARC

EPSRC GR/T04465/01

www.eslea.uklight.ac.uk

- **e-VLBI development**:
  - Investigate network, compare with switched light paths, get 512 Mbps VLBI data flows.
  - Matt Strong PDRA started Oct 05, finish July 07
- **Protocols:** Develop non-TCP data transport
  - UDPVLBI developed by Simon Casey JBO
  - DCCP developed at UCL
  - VSI-E, Tsnami, SCTP to be looked at
  - Tests using vlbi data streams
  - ESLEA funding ends July 07
  - 1st yr forms contributed work to FABRIC, 2nd yr funded by EXPReS
  - RA Advert just placed.
- *Work fits in nicely with FABRIC WP1.2.1*

UKLight Switched light path

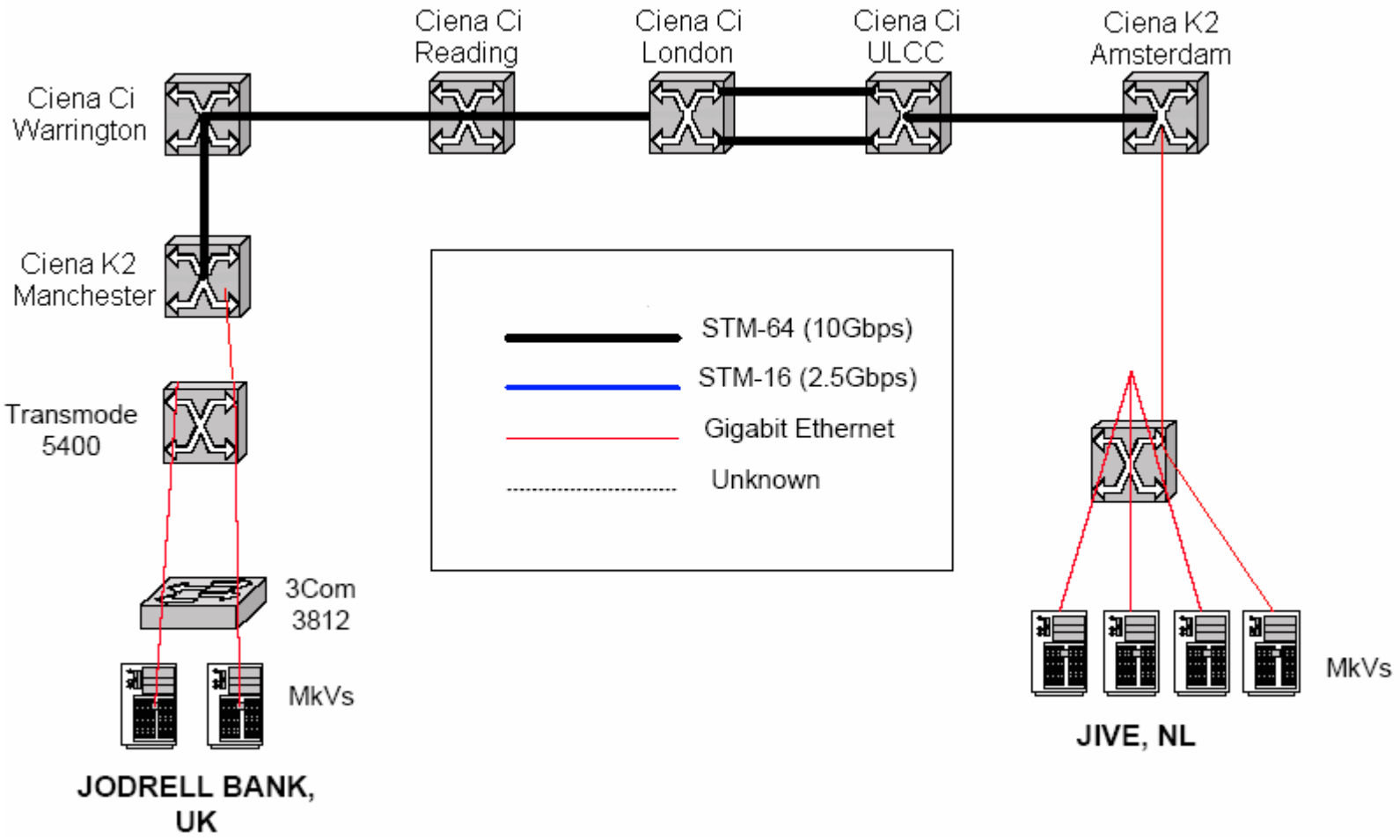

GÉANT2
www.geant2.net

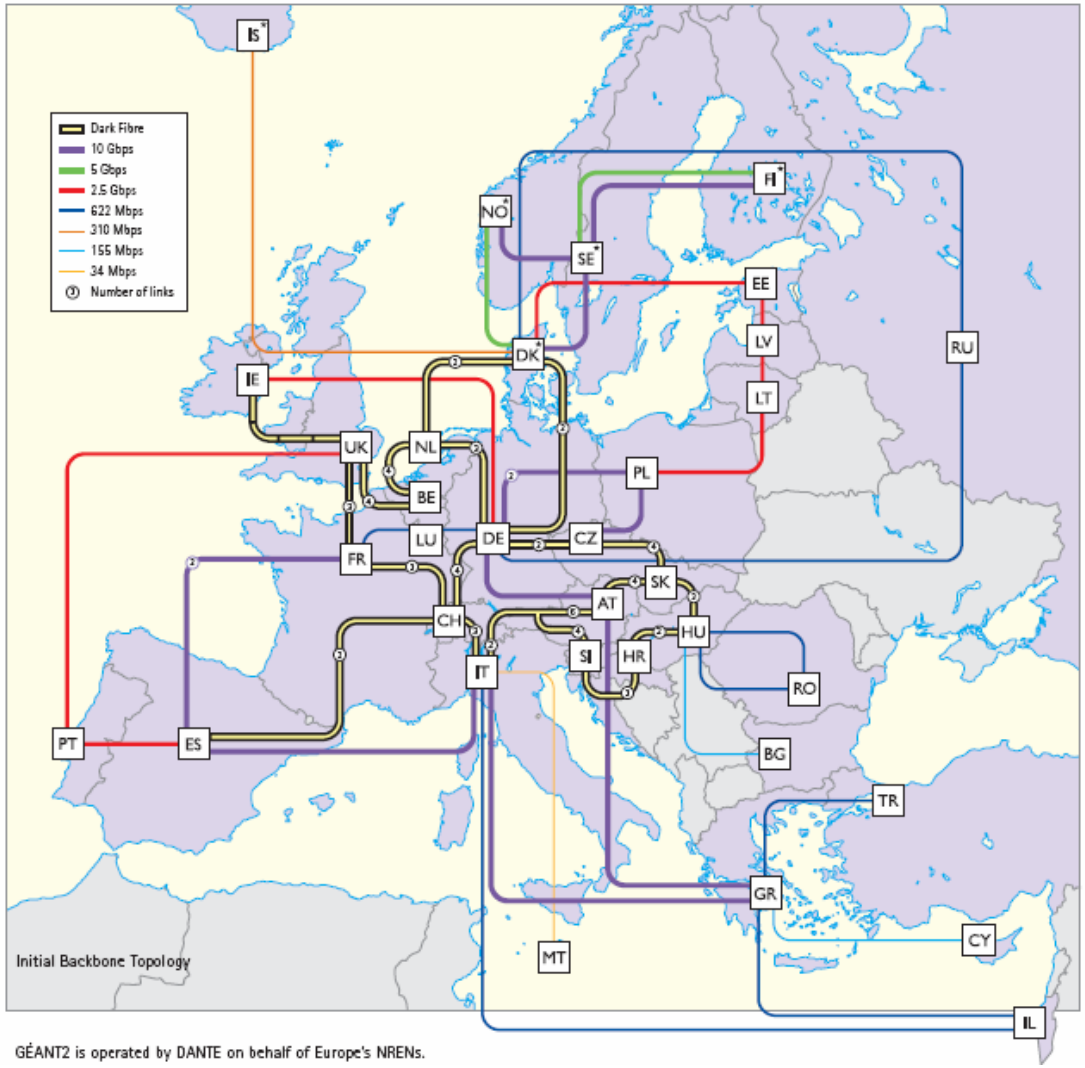

GÉANT2 is operated by DANTE on behalf of Europe's NRENs.

DANTE
www.dante.net

Routes across GEANT used by eVLBI MkVs

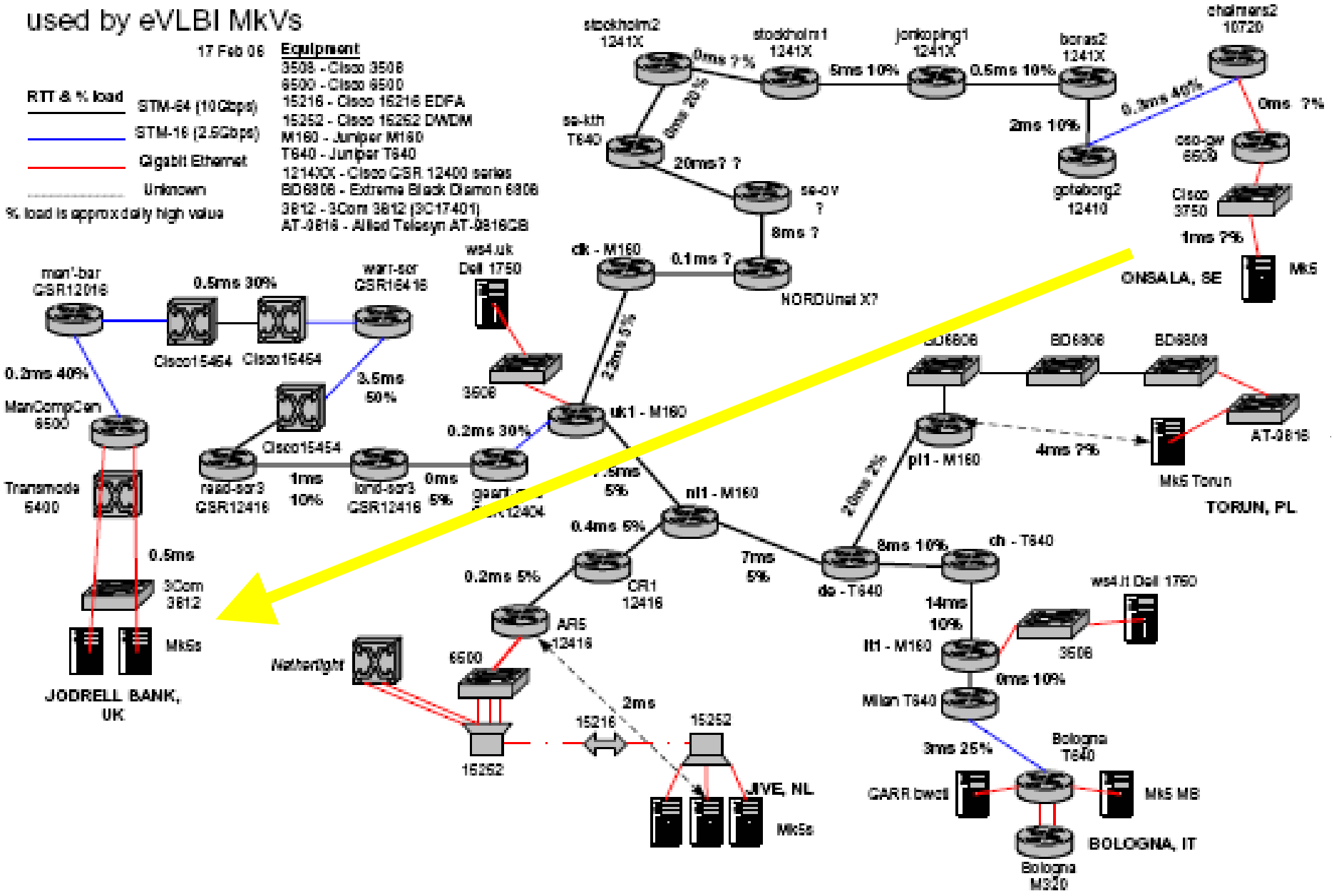

Broadband Data Path – the hardware

- 4 Gbps or more Onsala-eMERLIN correlator
- Use lightpath connection (Nordunet, GEANT2, SuperJANET5)
- Needs
  - Data acquisition at Onsala –How?
  - Format conversion
  - Transmission on Network - 10 GE or multi 1 GE?
  - 10 GE link JBO-Manchester connection to UKLight
  - Format conversion to eMERLIN correlator

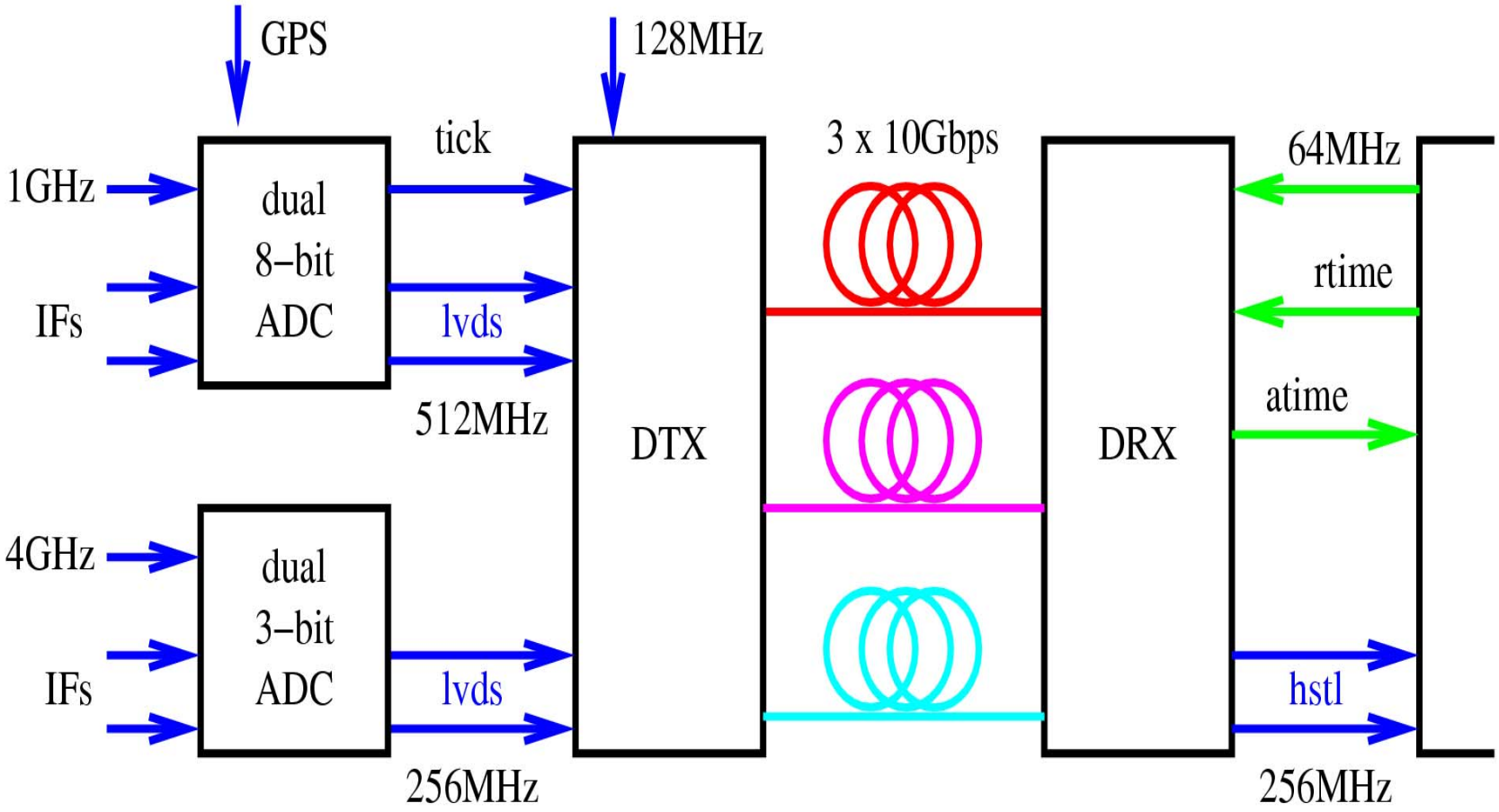

EVLA/eMERLIN Data Transmission System

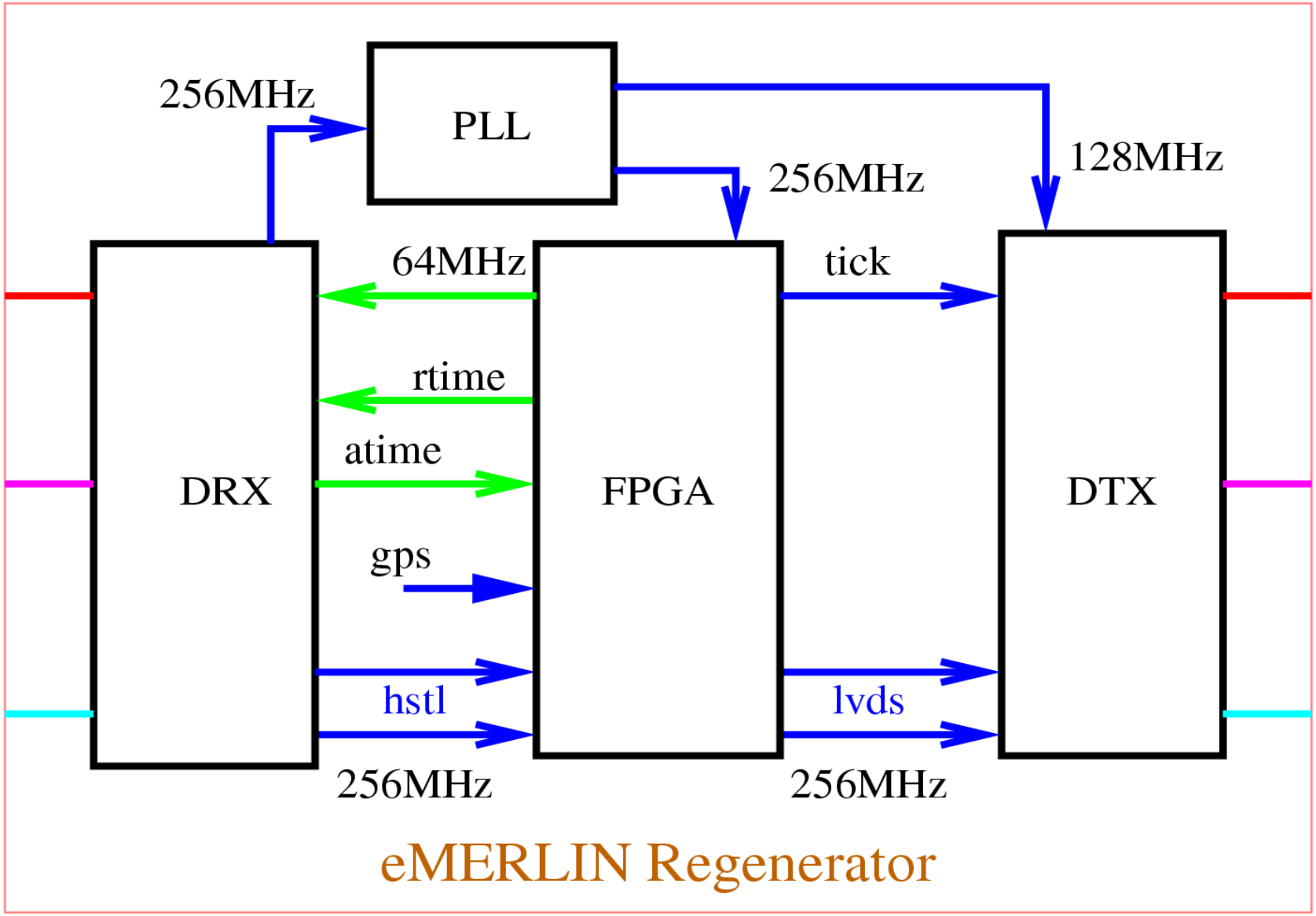
256MHz
PLL
128MHz
256MHz
64MHz
tick
rtime
atime
DRX
FPGA
DTX
gps
hstl
lvds
256MHz
256MHz
eMERLIN Regenerator

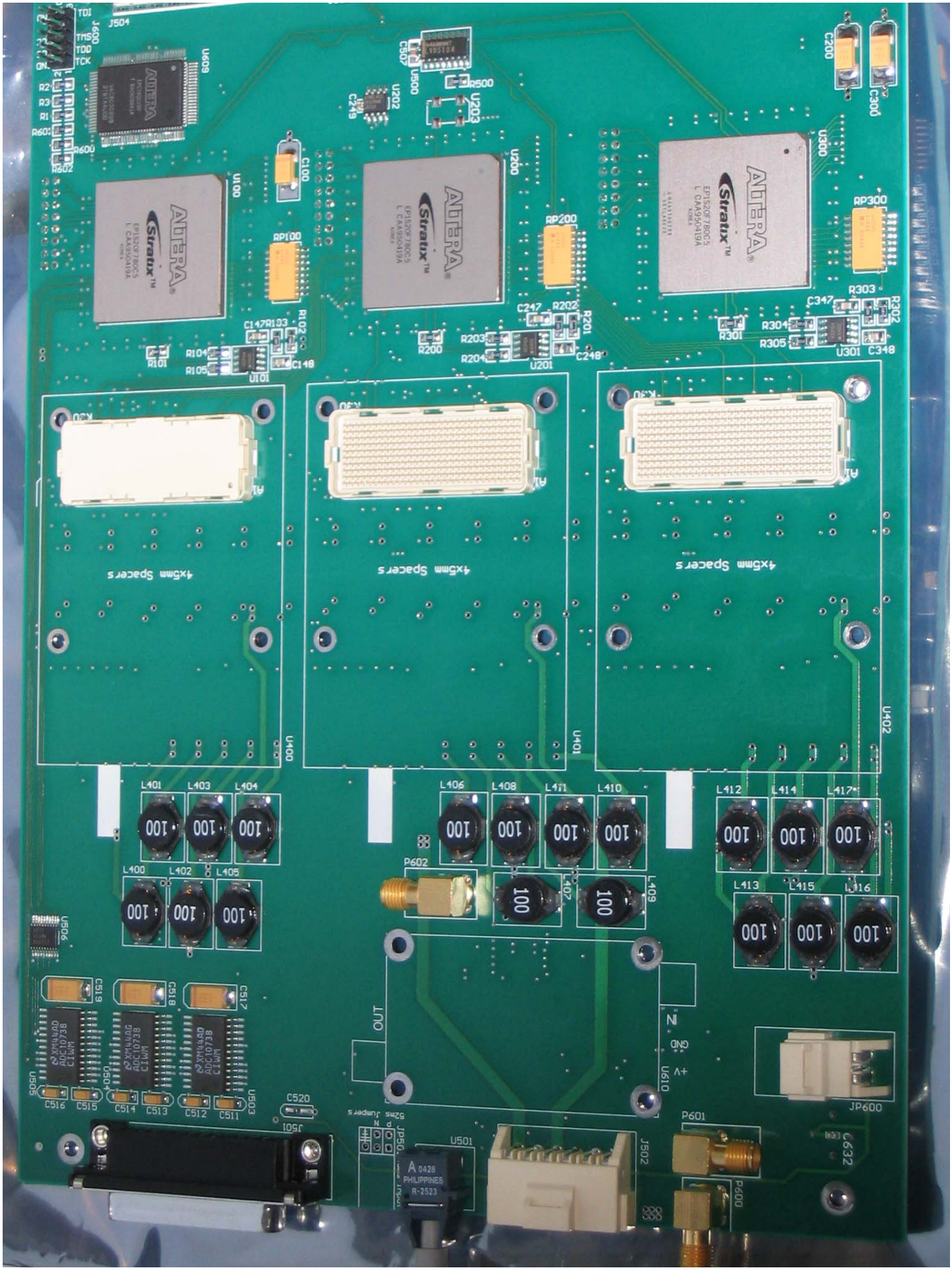

ALTERA
Stratix
EP1S20F780C5
L CAA950419A
4x5mm Spacers
U400
U401
U402
U100
U200
U300
U101
U201
U301
U500
U501
U502
U503
U504
U505
U506
U601
U602
U609
U610
J501
J502
J504
J600
J601
J602
J600
J601
J602
C100
C200
C300
C347
C348
C247
C248
C249
C507
C512
C513
C514
C515
C516
C517
C518
C519
C520
C632
R101
R102
R103
R104
R105
R200
R201
R202
R203
R204
R301
R302
R303
R304
R305
R500
RP100
RP200
RP300
L400
L401
L402
L403
L404
L405
L406
L407
L408
L409
L410
L411
L412
L413
L414
L415
L416
L417
P600
P601
P602
OUT
IN
GND
+V
PHILIPPINES
R-2523

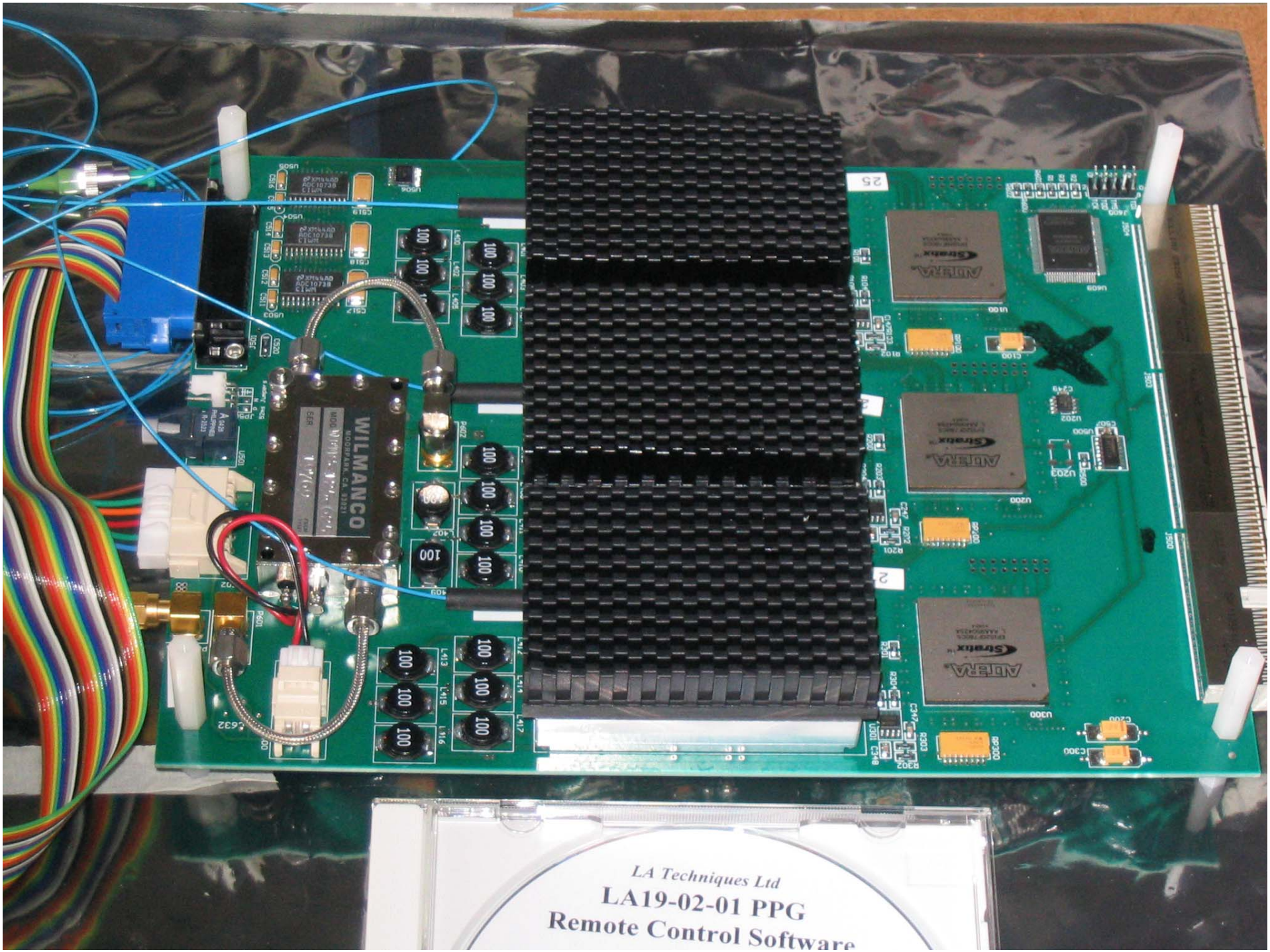
WILMANCO
LA Techniques Ltd
LA19-02-01 PPG
Remote Control Software

NATIONAL RADIO ASTRONOMY OBSERVATORY
ALMA-EVLA DIGITAL DATA TRANSMISSION SYSTEM FORMATTER
REVISION E EVLA DWG. NO. 23050-00027E
ALMA DWG. NO. BEND-53.05.00.01
M. REUNELL, C. LANGLEY, K. SHORES, J. JACKSON
FEBRUARY 2005
SERIAL NO.
CLOCK IN
INIT FPGAS
TDO
TCK
VCC
GND
D--FPGA3 TPS-->
D--FPGA2 TPS--7
D--FPGA1 TPS--7
FPGA3 1.5V
FPGA2 1.5V
FPGA1 1.5V
DONE
94V-0
1805

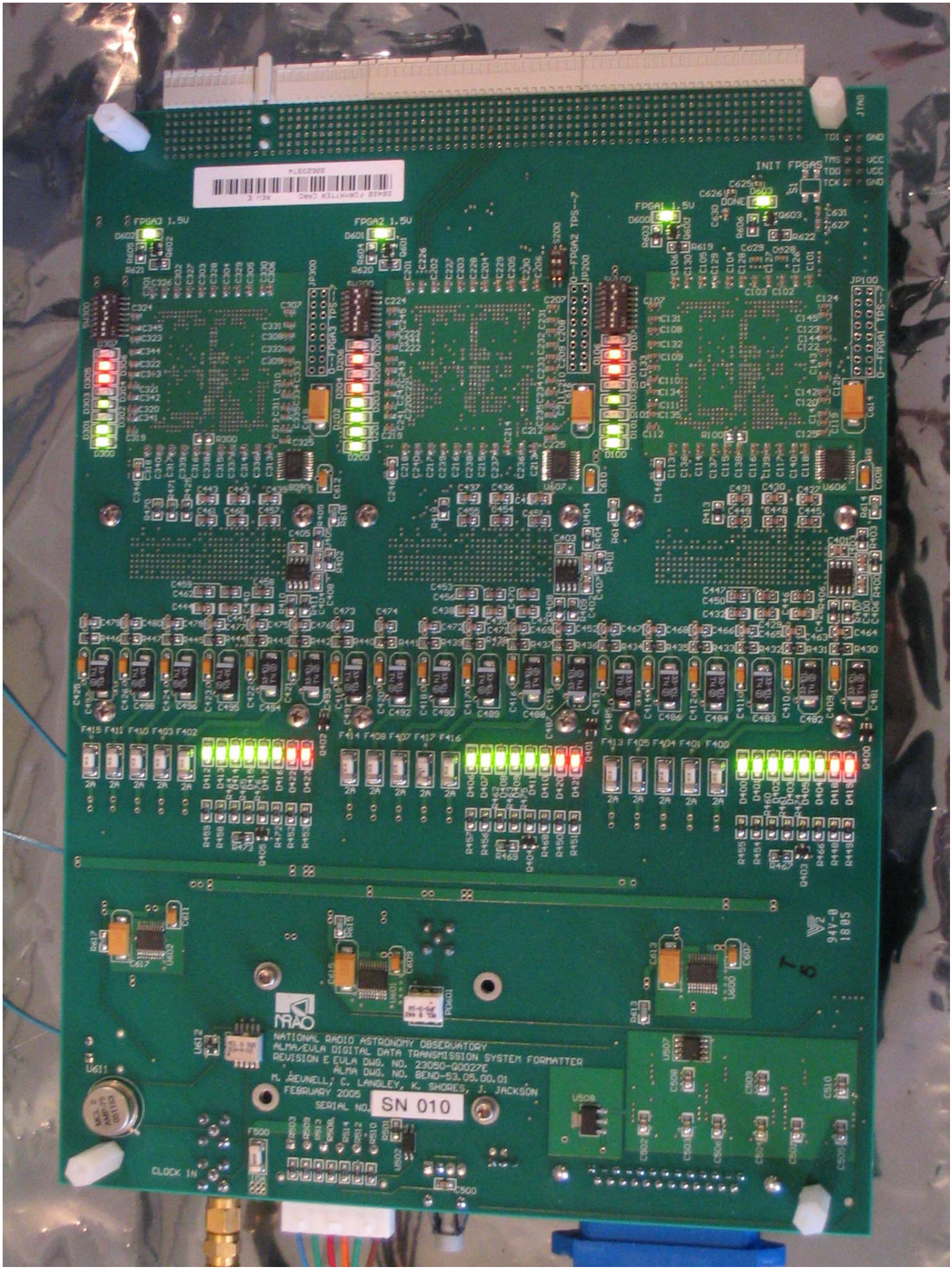
FPGA3 1.5V
FPGA2 1.5V
FPGA1 1.5V
DONE
INIT FPGAS
JTAG
TDI
TMS
TDO
TCK
GND
VCC
JP100
JP200
JP300
F415 F411 F410 F403 F402
F414 F408 F407 F417 F416
F413 F405 F404 F401 F400
NRAO
NATIONAL RADIO ASTRONOMY OBSERVATORY
ALMA/EVLA DIGITAL DATA TRANSMISSION SYSTEM FORMATTER
REVISION E EVLA DWG. NO. 23050-00027E
ALMA DWG. NO. BEND-53.05.00.01
M. REVNELL, C. LANGLEY, K. SHORES, J. JACKSON
FEBRUARY 2005
SERIAL NO.
SN 010
CLOCK IN
94V-0

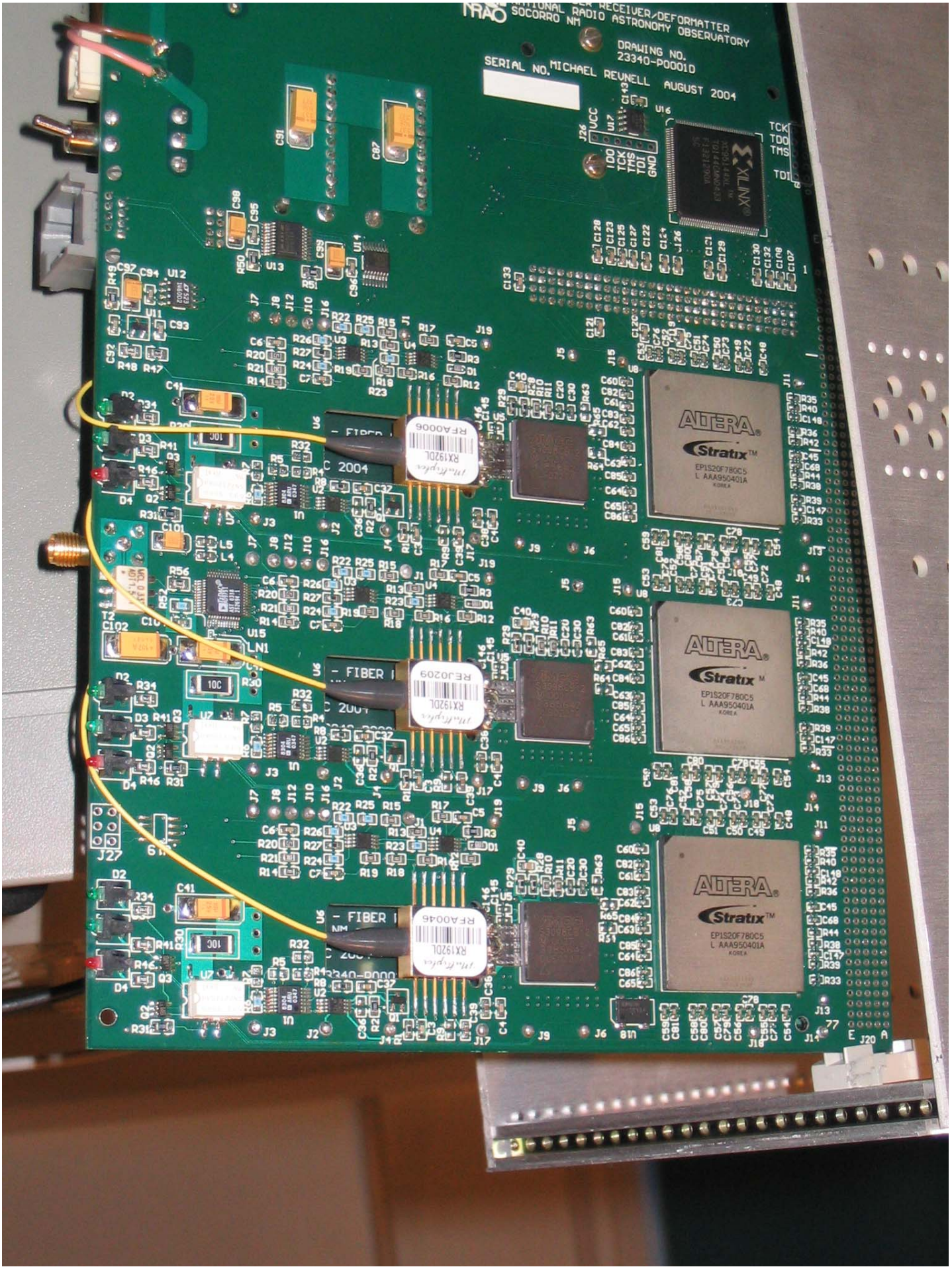
NRAO
NATIONAL RADIO ASTRONOMY OBSERVATORY
SOCORRO NM
DRAWING NO.
23340-P0001D
SERIAL NO.
MICHAEL REVNELL AUGUST 2004
ALTERA
Stratix
EP1S20F780C5
XILINX

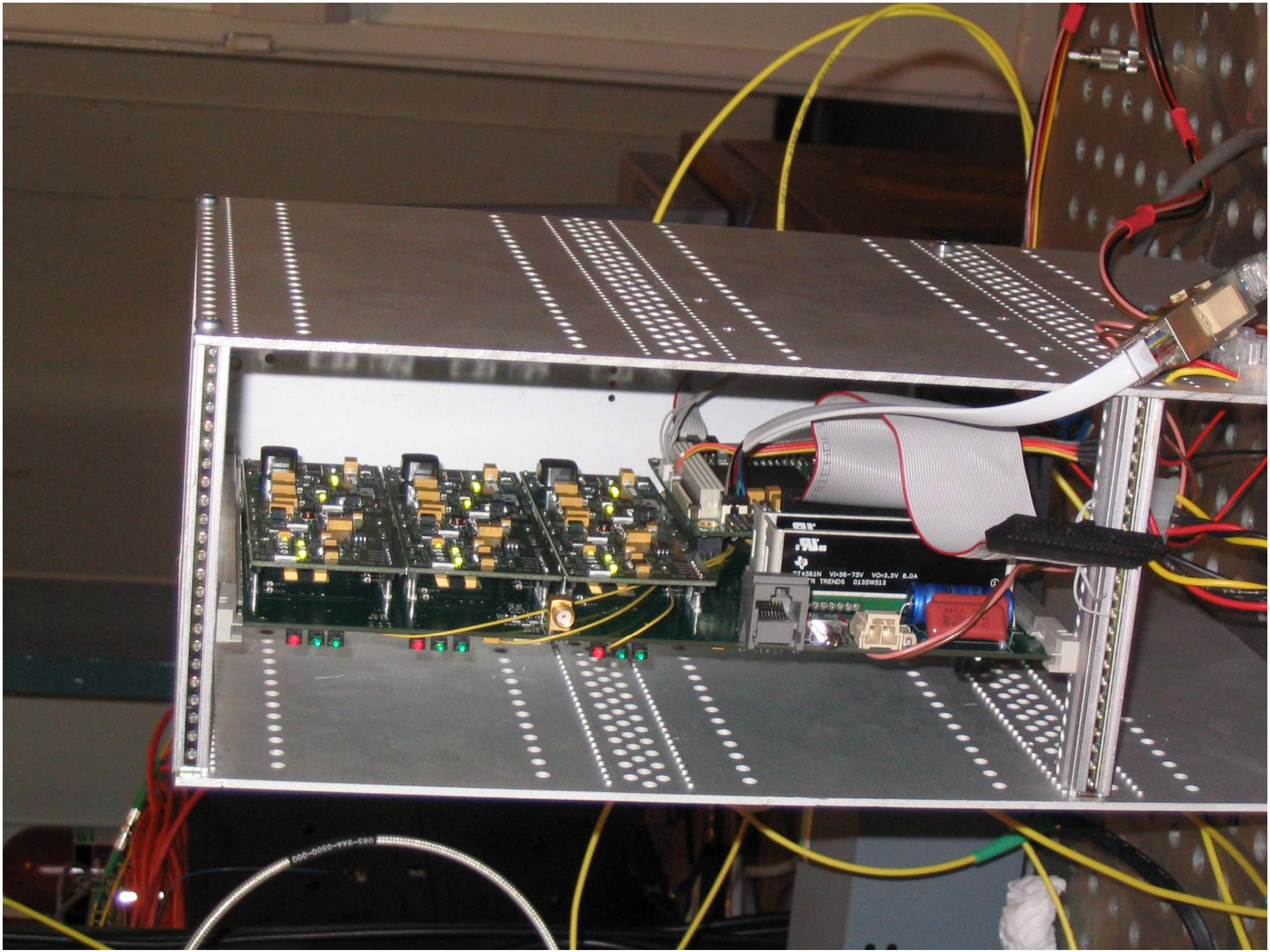

Export/Import of Data

- Signals are streamed
- Data are packed
  - Requires
    - Protocol: custom internally
    - Interfaces: custom internally
- Significant free logic in our Xilinx-4 SX35s
- Relatively simple PCB required to extract to or from eMERLIN data in filtered form via IS protocol.

Personnel:

- New Protocol RA
- New digital engineer